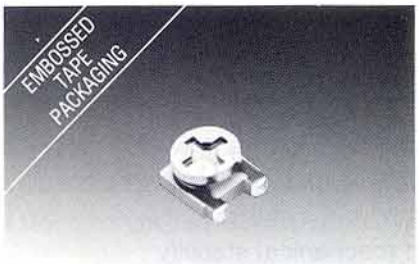

SMD 4MM SQUARE / SINGLE-TURN CERMET / INDUSTRIAL / OPEN FRAME

- Recommended for reflow solder processing
- Unique cross-slot rotor design suitable for pick and place and automatic adjustment equipment
- Supplied in 12mm embossed tape, compatible with automatic assembly equipment
- Two packaging orientations - "W" and "X"

BOURNS

Model 3304

3® Trimming Potentiometer

Electrical Characteristics

Standard Resistance Range
.....500 to 1,000,000 ohms
(see standard resistance table)
Resistance Tolerance.... ±25% std.
Absolute Minimum Resistance
.....5% max.
Contact Resistance Variation
.....5% max.
Resolution.....Infinite
Adjustment Angle.....230° nom.

Environmental Characteristics

Power Rating (50 volts max.)
70°C.....0.2 watt
Temperature Range
.....−55°C to +125°C
Temperature Coefficient
.....±200ppm/°C nom.
Humidity..MIL-STD-202, Method 103
500 hours (5% ΔTR)
Vibration...30G (2% ΔTR, 2% ΔVR)
Shock....100G (2% ΔTR, 2% ΔVR)
Load Life
.....1,000 hours 0.2 watt @ 70°C
(5% ΔTR)
Mechanical Life.....20 cycles
(15% ΔTR)

Physical Characteristics

Torque (Operating)
.....3.0 oz-in. max.
Mechanical Angle.....Continuous
Marking.....Manufacturer's trademark, resistance code, manufacturer's full part number and date code on packaging
Packaging.....750 pieces/7" reel

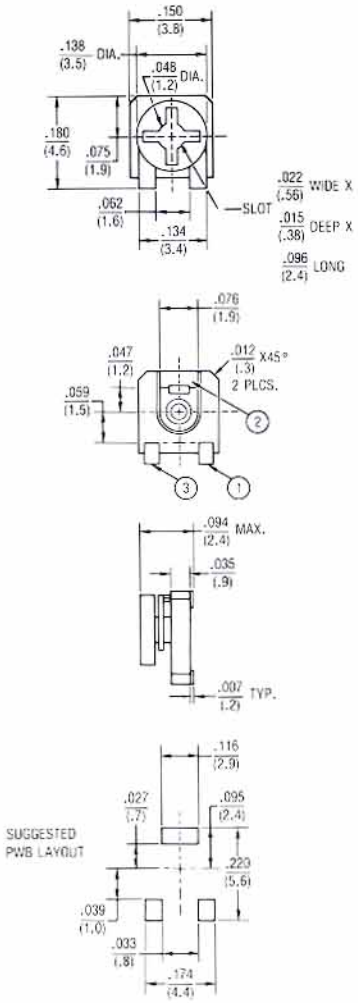

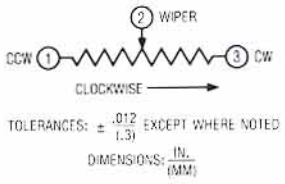

TAPE AND REEL

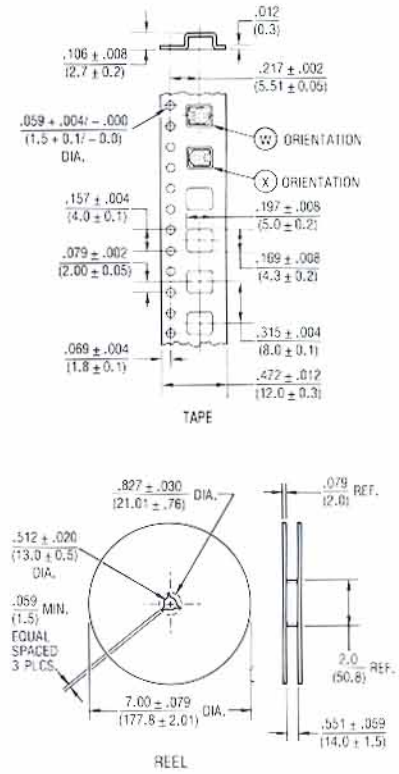

STANDARD RESISTANCE TABLE

Resistance (Ohms)	Resistance Code
500	501
1,000	102
2,000	202
5,000	502
10,000	103
20,000	203
50,000	503
100,000	104
500,000	504
1,000,000	105

HOW TO ORDER

3304 X - 1 - 103 E

Model
Style
Standard or Modified Product Indicator
-1 = Standard Product
Resistance Code
Embossed Tape Designator

Consult factory for other available options.

OBSOLETE