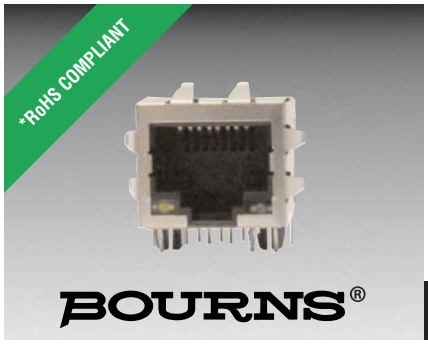


## Features

- Complies with IEEE 802.3 standard specifications including 350 µH with 8 mA DC bias
- Minimum interwinding breakdown voltage of 1500 Vrms
- RoHS compliant at 260 °C peak temp.
- Integrated magnetics design provides higher reliability and conserves board space

# PT44201D - Single Port 10/100 Base-Tx

## Electrical Specifications @ 25 °C

Insertion Loss
1-100 MHz .....-1.0 dB max.
Return Loss
1-30 MHz .....-18 dB min.
30-60 MHz .....-14 dB min.
60-80 MHz .....-12 dB min.
Crosstalk
1-100 MHz .....-35 dB min.
CMRR
1-50 MHz .....-30 dB min.
50-150 MHz .....-20 dB min.
Operating Temperature ....0 °C to +70 °C
Storage Temperature ....-40 °C to +85 °C

## Physical Specifications

Metal Shielding
.....Nickel-plated copper alloy
Contact .....Phosphor bronze, 6 u-inch gold-flashed unless otherwise specified
Housing.....Thermoplastic PBT UL94V0 rated

## Packaging Specifications

.....560 pcs./tray

## How to Order

PT44201D

Model

## Product Dimensions

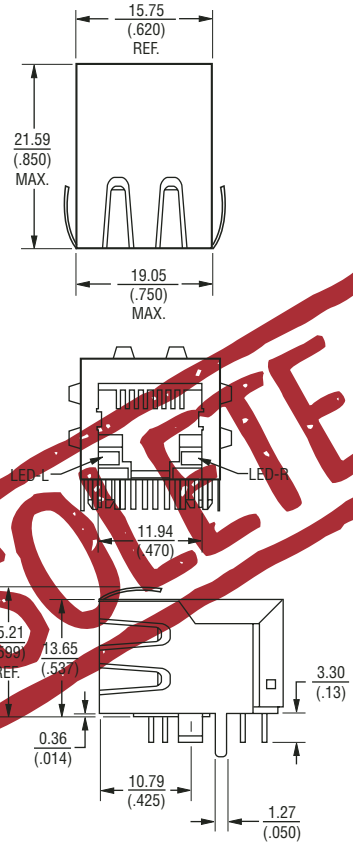


## Recommended PCB Layout

COMPONENT SIDE VIEW

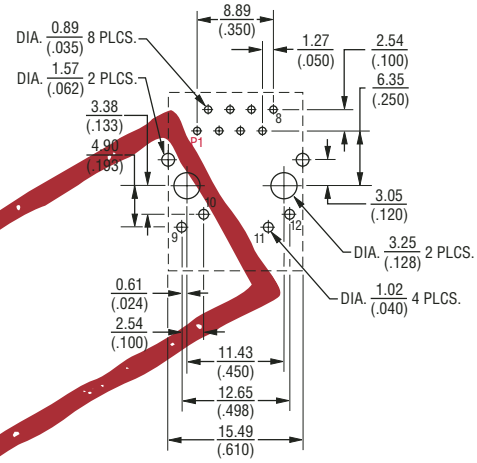


DIMENSIONS: MM (INCHES)
TOLERANCES: .XX 0.38 (.015)
TOLERANCES: .XXX 0.25 (.010)

## Typical Part Marking

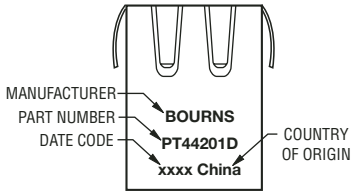


## Electrical Schematic

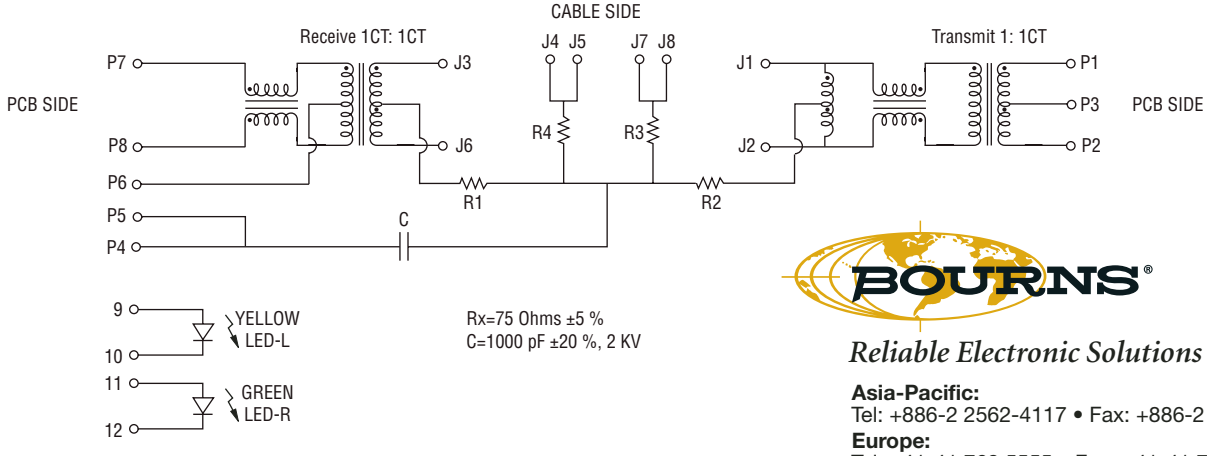


Rx=75 Ohms ±5 %
C=1000 pF ±20 %, 2 KV

07/06

*RoHS Directive 2002/95/EC Jan 27 2003 including Annex
Specifications are subject to change without notice.
Customers should verify actual device performance in their specific applications.

BOURNS®
*Reliable Electronic Solutions*

**Asia-Pacific:**
Tel: +886-2 2562-4117 • Fax: +886-2 2562-4116
**Europe:**
Tel: +41-41 768 5555 • Fax: +41-41 768 5510
**The Americas:**
Tel: +1-951 781-5500 • Fax: +1-951 781-5700
**www.bourns.com**

OBSOLETE